www.ietdl.org

Published in IET Control Theory and Applications
Received on 25th September 2012
Revised on 6th February 2013
Accepted on 13th March 2013
doi: 10.1049/iet-cta.2012.0713

ISSN 1751-8644

Brief Paper

Local mode-dependent decentralised H_∞ control of uncertain Markovian jump large-scale systems

Guilin Zhuansun, Junlin Xiong

Department of Automation, University of Science and Technology of China, Hefei 230026, People's Republic of China
E-mail: junlin.xiong@gmail.com

Abstract: This study considers the problem of robust H_∞ control using decentralised state feedback controllers for a class of large-scale systems with Markov jump parameters. A sufficient condition is developed to design controllers using local system states and local system operation modes. The sufficient condition is given in terms of rank constrained linear matrix inequalities. An illustrative numerical example is given to demonstrate the developed theory.

Nomenclature

$\mathbb{R}^+$ denotes the set of positive real numbers, $\mathbb{S}^+$ denotes the set of real symmetric positive-definite matrices. The $\star$ in symmetric matrix is used to represent the blocks induced by symmetry. $\|\cdot\|$ refers to the Euclidean norm for vectors and the induced 2-norm for matrices. $L_2[0,\infty)$ denotes the space of square integrable vector functions over $[0,\infty)$.

1 Introduction

In physical world, many systems, for example, power systems, digital communication networks, economic systems and ecological systems, can be seen as large-scale systems. Generally, large-scale systems represent a class of dynamic systems with high dimensions and complex structures, and such systems are usually characterised by geographical separation. When economic cost and reliability of communication links have to been taken into account, the decentralised control scheme is useful [1]. In recent control literatures, much attention has been given to decentralised control problems [2–4]. Compared with centralised controllers, decentralised controllers are designed only using locally available information of the subsystems, which means a lower level of connectivity and communication costs.

During the past years, there has been quite a lot of attention devoted to the study of Markovian jump linear systems (MJLSs) and some useful control theories for this class of systems have been developed, such as stabilisation [5–7], H_2 control [8], H_∞ control [9–11], two-dimensional (2D) systems [12, 13], singular systems [14, 15] and model reduction [16]. Factually, large-scale systems are often subject to abrupt changes in their structures because of component failures or repairs, sudden environmental disturbances, changing subsystem interconnections, etc. These structural variations often lead to random variations of the system parameters. In these situations, the model of MJLSs can be used to capture the abrupt changes and some study of large-scale systems using the model of MJLSs can be seen in [2, 3, 17, 18]. In the system setup, the changes of operation modes in the large-scale system are governed by a Markov process, referred to as global mode process, while the subsystems of the large-scale system have their own operation modes. Owing to the interaction of the subsystems, the changes of subsystem operation modes are not necessarily Markovian. In [3, 17], the controllers designed only using the state and mode information locally available within the subsystems are referred to as local mode-dependent controllers. A local mode-dependent controller changes its operation mode only when the corresponding subsystem changes its operation mode. The controllers studied in [2, 18], known as global mode-dependent controllers, change their gains whenever any of the subsystems switches to a different mode. Hence, compared with the global mode control scheme, the local mode control scheme can effectively reduce the number of control gains and remove undesirable transient dynamics. As the local mode processes for the subsystems is non-Markovian, the local mode-dependent controllers cannot be obtained directly, but can be derived from the global ones, and the derivation can be seen in Section 3.2 of [3].

In the large-scale systems considered in this paper, there are two kinds of internal uncertainties affecting the dynamics of system considered in this paper, which are local uncertainties and interconnection uncertainties. The local uncertainties result from the existence of uncertain dynamics in each subsystem and the interconnection uncertainties result from the fact that the subsystems are interrelated and interact with each other. In this paper, these uncertainties are assumed to satisfy integral quadratic constraints (IQCs), which have

© The Institution of Engineering and Technology 2013

been proven to be effective in a number of robust control problems, for example, see [2, 18, 19].

In [3], with no exogenous disturbances entering the system, the authors considered the problem of decentralised stabilisation and developed a sufficient condition to design local mode decentralised stabilising controllers. However, the external disturbances are often unavoidable in more practical situations. Apart from internal uncertainties, each subsystem of the large-scale system is also affected by exogenous input signals. This paper focuses on the problem of designing decentralised state feedback control laws to reduce the affect the disturbance input has on the controlled output in an H_∞ sense, with the controllers designed using local system states and operation modes information. The purpose is to find controllers such that the closed-loop large-scale system is mean square stable (MSS) and its H_∞ norm is below a prescribed level. This study could be considered as a further development of the result of [3].

This paper is organised as follows. Section 2 gives some preliminary knowledge of the Markov jump systems. Section 3 formulates the class of uncertain large-scale systems with Markovian jumping parameters. In Section 4, a sufficient condition is developed to construct local mode-dependent decentralised robust H_∞ controllers, so that the closed-loop system is MSS and its H_∞ norm is below a prescribed level. A numerical example is presented in Section 5 to illustrate the usefulness of the developed theory. Section 6 concludes this paper.

Notation: $\mathbb{R}^+$ denotes the set of positive real numbers, $\mathbb{S}^+$ denotes the set of real symmetric positive definite matrices. The $\star$ in symmetric matrix is used to represent the blocks induced by symmetry. $\|\cdot\|$ refers to the Euclidean norm for vectors and the induced 2-norm for matrices. $L_2[0,\infty)$ denotes the space of square integrable vector functions over $[0,\infty)$.

2 Preliminaries

Consider a continuous-time Markov jump parameter system $\mathcal{S}_0$ on a complete probability space $(\Omega, \mathcal{F}, \Pr)$ described by the following state-space equations

$$\mathcal{S}_0 : \begin{cases} \dot{x}(t) = A(\eta_t)x(t) + B(\eta_t)w(t) \\ z(t) = C(\eta_t)x(t) + D(\eta_t)w(t) \end{cases}$$

where $x(t) \in \mathbb{R}^n$ is the state, $w(t)$ is the disturbance input, assumed to be an arbitrary signal in $L_2[0,\infty)$, $z(t)$ is the controlled output, η_t is a time-homogeneous Markov process taking values on the finite set $\mathcal{M} = \{1, 2, \ldots, M\}$. Let $Q = (q_{\mu\nu}) \in \mathbb{R}^{M\times M}$ be the transition rate matrix of the process, with $q_{\mu\nu} \geq 0$, $\mu \neq \nu$ and $q_{\mu\mu} = -\sum_{\nu\neq\mu}^{M} q_{\mu\nu} \leq 0$, such that transition probabilities of the system mode variable η_t satisfy

$$P(\eta_{t+\Delta} = \nu | \eta_t = \mu) = \begin{cases} q_{\mu\nu}\Delta + o(\Delta), & \mu \neq \nu \\ 1 + q_{\mu\mu}\Delta + o(\Delta), & \mu = \nu \end{cases}$$

When $\eta_t = i$, we have $A(\eta_t) = A_i$, $B(\eta_t) = B_i$, $C(\eta_t) = C_i$, $D(\eta_t) = D_i$, respectively. The following definition generalises the concept of MSS for Markov jump systems [5].

Definition 1: The system $\mathcal{S}_0$ with $w(t) \equiv 0$ is MSS if

$$\lim_{t\to\infty} \mathrm{E}(\|x(t)\|^2) = 0$$

for any initial condition $x(0) \in \mathbb{R}^n$ and $\eta_0 \in \mathcal{M}$.

The next definition is a generalisation of the H_∞-norm for Markov jump systems [9].

Definition 2: Suppose system $\mathcal{S}_0$ is MSS, then the H_∞-norm of the system is defined as

$$\|\mathcal{S}_0\|_\infty = \sup_{\substack{w(\cdot)\in L_2[0,\infty) \\ x(0)=0, \|w(\cdot)\|\neq 0}} \frac{\left\{\mathrm{E}\left[\int_0^\infty \|z(t)\|^2\,\mathrm{d}t\right]\right\}^{1/2}}{\left\{\int_0^\infty \|w(t)\|^2\,\mathrm{d}t\right\}^{1/2}}$$

With the definitions given above, an linear matrix inequality (LMI) characterisation for the H_∞ norm of system $\mathcal{S}_0$ can be described by the following bounded real lemma; see [16, 20].

Lemma 1: Given $\gamma > 0$, system $\mathcal{S}_0$ is MSS with $\|\mathcal{S}_0\|_\infty < \gamma$ if and only if there is $P_i \in \mathbb{S}^+$ such that the coupled LMIs

$$\begin{bmatrix} A_i^{\mathrm{T}}P_i + P_iA_i + \sum_{j=1}^{M} q_{ij}P_j & P_iB_i & C_i^{\mathrm{T}} \\ B_i^{\mathrm{T}}P_i & -\gamma^2 I & D_i^{\mathrm{T}} \\ C_i & D_i & -I \end{bmatrix} < 0$$

are satisfied for all $i = 1, \ldots, M$.

3 Problem statement

Consider an uncertain Markovian jump large-scale system $\mathcal{S}$, which is comprised of N subsystems. The ith subsystem $\mathcal{S}_i$, $i \in \mathcal{N} \triangleq \{1, 2, \ldots, N\}$, is described by

$$\mathcal{S}_i : \begin{cases} \dot{x}_i(t) = A_i(\eta_{i,t})x_i(t) + B_i(\eta_{i,t})u_i(t) + E_i(\eta_{i,t})r_i(t) \\ \qquad\qquad + F_i(\eta_{i,t})\xi_i(t) + G_i(\eta_{i,t})w_i(t) \\ z_i(t) = C_i(\eta_{i,t})x_i(t) + D_i(\eta_{i,t})u_i(t) \\ \zeta_i(t) = H_i(\eta_{i,t})x_i(t) \end{cases}$$

where $x_i(t) \in \mathbb{R}^{n_i}$ is the state of the subsystem $\mathcal{S}_i$, $u_i(t)$ is the control input, $r_i(t)$ is the interconnection input, describing the effect of the other subsystems $\mathcal{S}_j$, $j \neq i$, on subsystem $\mathcal{S}_i$, $\xi_i(t)$ is the local uncertainty input, $w_i(t) \in L_2[0,\infty)$ is the exogenous disturbance input, $z_i(t)$ is the controlled output, $\zeta_i(t)$ is the uncertainty output, $\eta_{i,t}$ denotes the operation mode of subsystem $\mathcal{S}_i$ and takes values in a finite state space $\mathcal{M}_i \triangleq \{1, 2, \ldots, M_i\}$. The initial condition of subsystem $\mathcal{S}_i$ is given by $x_{i0} \in \mathbb{R}^{n_i}$ and $\eta_{i0} \in \mathcal{M}_i$. The structure of the ith subsystem is shown in Fig. 1.

For the large-scale system $\mathcal{S}$, an operation mode pattern set $\mathcal{M}_p$ is introduced to describe the vector mode states visited by $[\eta_{1,t} \ \ldots \ \eta_{N,t}]$. Let $\mathcal{M}_p$ be a non-empty subset of the set $\mathcal{M}_1 \times \cdots \times \mathcal{M}_N$, and is supposed to have M elements where $\max_{i\in\mathcal{N}} M_i \leq M \leq \Pi_{i=1}^{N} M_i$. In this case, we

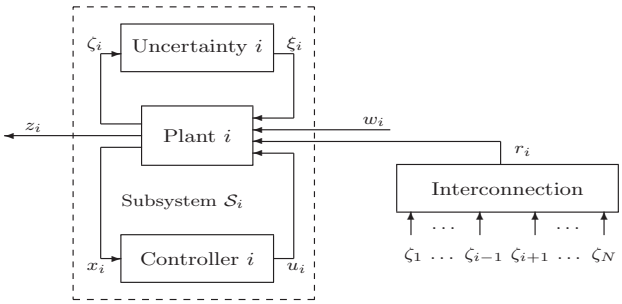

Fig. 1 *Structure of subsystem $\mathcal{S}_i$*

© The Institution of Engineering and Technology 2013
IET Control Theory Appl., 2013, Vol. 7, Iss. 7, pp. 1029–1038
doi: 10.1049/iet-cta.2012.0713

say the large-scale system has M global operation modes. Let $\mathcal{M} \triangleq \{1, 2, \ldots, M\}$, then there must exist a bijective function $\Psi : \mathcal{M}_p \to \mathcal{M}$, given by $\mu = \Psi(\mu_1, \mu_2, \ldots, \mu_N)$. The inverse function $(\mu_1, \mu_2, \ldots, \mu_N) = \Psi^{-1}(\mu)$ defines the mapping $\Psi^{-1} : \mathcal{M} \to \mathcal{M}_p$. Also, the components of the inverse function Ψ^{-1} are denoted by Ψ_i^{-1}, that is, $\mu_i = \Psi_i^{-1}(\mu)$. The large-scale system is said in global mode μ at time t if $\Psi(\eta_{1,t} \ \ldots \ \eta_{N,t}) = \mu$. Defined $\eta_t \triangleq \Psi(\eta_{1,t} \ \ldots \ \eta_{N,t})$, and η_t is used to represent the global mode process. The global mode process is assumed to be a stationary ergodic Markov process with the state transition rate matrix given by $Q = (q_{\mu\nu}) \in \mathbb{R}^{M \times M}$. Let q_∞ denote the steady-state distribution of η_t, and it can be computed according to

$$q_\infty = \mathbf{e}(Q + \mathbf{E})^{-1}$$

where $\mathbf{e} = [1 \ \ 1 \ \ \cdots \ \ 1] \in \mathbb{R}^{1 \times M}$, $\mathbf{E} = [\mathbf{e}^{\mathrm{T}} \ \ \mathbf{e}^{\mathrm{T}} \ \ \cdots \ \ \mathbf{e}^{\mathrm{T}}]^{\mathrm{T}} \in \mathbb{R}^{M \times M}$.

The relationship between the local operation modes of the subsystems and the global operation modes of the entire system has been established. Using an auxiliary system, under some conditions, if the global mode-dependent controllers are given, the local ones can be derived, which will be shown in details in the next section.

It is also assumed that the system $\mathcal{S}$ satisfies the following assumptions. For all $i = 1, \ldots, N$,

1. $D_i^{\mathrm{T}}(\eta_{i,t})[C_i(\eta_{i,t}) \ D_i(\eta_{i,t})] = [0 \ R_i(\eta_{i,t})]$, $R_i(\eta_{i,t}) = R_i^{\mathrm{T}}(\eta_{i,t}) > 0$.
2. The pair $[A_i(\eta_{i,t}), B_i(\eta_{i,t})]$ is stabilisable.

Remark 1: Assumption 1 is used to simplify the derivation of the main result without loss of generality. Under Assumption 2, the stabilisability of each subsystem in every operation modes does not imply that the Markovian jump large-scale system is stabilisable. The reason is twofold. Firstly, the stability of Markovian jump systems depends not only on the system matrix, but also on the mode transition rate matrix. Second, the stability of all subsystems cannot guarantee the stability of a large-scale system because of the interconnections between subsystems.

In this paper, the local uncertainties in each subsystem and the interconnections between subsystems are described by operators

$$\xi_i(t) = \phi_i^{\xi}(t, \zeta_i(\cdot)|_0^t, \eta_i(\cdot)|_0^t)$$
$$r_i(t) = \phi_i^{r}(t, \underline{\zeta}_i(\cdot)|_0^t, \eta_i(\cdot)|_0^t)$$

where $\underline{\zeta}_i(\cdot) \triangleq [\zeta_1(\cdot), \ldots, \zeta_{i-1}(\cdot), \zeta_{i+1}(\cdot), \ldots, \zeta_N(\cdot)]$. They are assumed to satisfy certain IQCs, and the definitions are presented as below.

Definition 3 [3]*:* Given a set of matrices $\bar{S}_i \in \mathbb{S}^+$, $i \in \mathcal{N}$. A collection of local uncertainty inputs $\xi_i(t)$, $i \in \mathcal{N}$, is an admissible local uncertainty for the large-scale system if there exists a sequence $\{t_l\}_{l=1}^{\infty}$, so that $t_l \geq 0$, $t_l \to \infty$, and for all l and for all $i \in \mathcal{N}$

$$\mathrm{E}\left(\int_0^{t_l} \left[\|\zeta_i(t)\|^2 - \|\xi_i(t)\|^2\right] \mathrm{d}t | x_0, \eta_0\right) \geq -x_{i0}^{\mathrm{T}} \bar{S}_i x_{i0} \tag{1}$$

where $x_0 = [x_{10}^{\mathrm{T}}, \ldots, x_{N0}^{\mathrm{T}}]^{\mathrm{T}}$, and $\eta_0 = \eta(0)$. The set of the admissible local uncertainties is denoted by Ξ.

Definition 4 [3]*:* Given a set of matrices $\tilde{S}_i \in \mathbb{S}^+$, $i \in \mathcal{N}$. The large-scale system is said to have admissible interconnections between subsystems if there exists a sequence $\{t_l\}_{l=1}^{\infty}$ such that $t_l \geq 0$, $t_l \to \infty$, and for all l and for all $i \in \mathcal{N}$

$$\mathrm{E}\left(\int_0^{t_l} \left[\left(\sum_{j=1, j \neq i}^{N} \|\zeta_j(t)\|^2\right) - \|r_i(t)\|^2\right] \mathrm{d}t | x_0, \eta_0\right) \geq -x_{i0}^{\mathrm{T}} \tilde{S}_i x_{i0} \tag{2}$$

The set of the admissible interconnections is denoted by Π.

Suppose the system $\mathcal{S}$ is subject to the uncertainty constraints (1) and (2), the aim of this paper is to design local mode-dependent decentralised controllers

$$u_i(t) = K_i(\eta_{i,t}) x_i(t), \quad i \in \mathcal{N} \tag{3}$$

such that the system $\mathcal{S}$ is MSS and the following H_∞ performance is satisfied: given $\gamma > 0$, if $x_0 = 0$, for all $i = 1, \ldots N$, then

$$\sup_{\substack{w(\cdot) \in L_2[0,\infty), \xi(\cdot) \in \Xi \\ \|w(\cdot)\| \neq 0, r(\cdot) \in \Pi}} \frac{\left\{\mathrm{E}\left[\int_0^\infty \left(\sum_{i=1}^N \|z_i(t)\|^2\right) \mathrm{d}t\right]\right\}^{1/2}}{\left\{\int_0^\infty \left(\sum_{i=1}^N \|w_i(t)\|^2\right) \mathrm{d}t\right\}^{1/2}} < \gamma \tag{4}$$

4 Main results

In this section, a sufficient condition will be developed to design local mode-dependent controllers. Owing to the local mode-dependent controllers cannot be obtained directly and the global operation mode process η_t is Markovian, let us enlarge the mode state space of the subsystem in $\mathcal{S}$ and consider an auxiliary class of uncertain systems $\tilde{\mathcal{S}}$ that contains the uncertain system $\mathcal{S}$ as a special case. There exist necessary and sufficient conditions for the design of H_∞ controllers for this auxiliary system, see [16, 20]. The ith subsystem of $\tilde{\mathcal{S}}$, $i \in \mathcal{N}$, is described by

$$\tilde{\mathcal{S}}_i : \begin{cases} \dot{\tilde{x}}_i(t) = \tilde{A}_i(\eta_t)\tilde{x}_i(t) + \tilde{B}_i(\eta_t)\left[\tilde{u}_i(t) + \tilde{\xi}_i^u(t)\right] \\ \qquad + \tilde{E}_i(\eta_t)\tilde{r}_i(t) + \tilde{F}_i(\eta_t)\tilde{\xi}_i(t) + \tilde{G}_i(\eta_t)\tilde{w}_i(t) \\ \tilde{z}_i(t) = \tilde{C}_i(\eta_t)\tilde{x}_i(t) + \tilde{D}_i(\eta_t)\left[\tilde{u}_i(t) + \tilde{\xi}_i^u(t)\right] \\ \tilde{\zeta}_i(t) = \tilde{H}_i(\eta_t)\tilde{x}_i(t) \end{cases}$$

where $\tilde{A}_i(\mu) = A_i(\mu_i)$, $\tilde{B}_i(\mu) = B_i(\mu_i)$, $\tilde{C}_i(\mu) = C_i(\mu_i)$, $\tilde{D}_i(\mu) = D_i(\mu_i)$, $\tilde{E}_i(\mu) = E_i(\mu_i)$, $\tilde{F}_i(\mu) = F_i(\mu_i)$, $\tilde{G}_i(\mu) = G_i(\mu_i)$, $\tilde{H}_i(\mu) = H_i(\mu_i)$, $\mu \in \mathcal{M}$ and $\mu_i = \Psi_i^{-1}(\mu) \in \mathcal{M}_i$. The uncertainty input $\tilde{\xi}_i(t)$ and $\tilde{r}_i(t)$ are, respectively, generated by the same operator as $\xi_i(t)$ and $r_i(t)$, and satisfy the IQCs in (1), (2). $w_i(t)$, $z_i(t)$, $\zeta_i(t)$ are replaced with $\tilde{w}_i(t)$, $\tilde{z}_i(t)$, $\tilde{\zeta}_i(t)$, respectively. $\tilde{\xi}_i^u$ is the uncertainty in the control input, satisfying the following IQCs.

Definition 5 [3]*:* Given $\beta_i^u(\mu) \in \mathbb{R}^+$, $i \in \mathcal{N}$, $\mu \in \mathcal{M}$. A collection of uncertainty input $\tilde{\xi}_i^u(t)$, $i \in \mathcal{N}$, is an admissible uncertainty input for the auxiliary large-scale system $\tilde{\mathcal{S}}$ if

$$\mathrm{E}\left(\int_0^{t_l} \left(\beta_i^u(\eta_t)\|\tilde{x}_i(t)\|^2 - \|\tilde{\xi}_i^u(t)\|^2\right) \mathrm{d}t | \tilde{x}_0, \eta_0\right) \geq 0 \tag{5}$$

for all l and for all $i \in \mathcal{N}$. The set of the admissible uncertainty inputs is denoted by $\tilde{\Xi}^u$.

© The Institution of Engineering and Technology 2013

Without loss of generality, we assume that the same sequence $\{t_l\}_{l=1}^{\infty}$ is used in Definitions 3, 4, 5.

Correspondingly, the global mode-dependent decentralised controllers of the auxiliary large-scale system will be designed as the form below

$$\tilde{u}_i(t) = \tilde{K}_i(\eta_t)\tilde{x}_i(t), \quad i \in \mathcal{N} \tag{6}$$

The following lemma relates the stabilisation of system $\mathcal{S}$ with local mode-dependent controllers (3) and the stabilisation of the auxiliary system $\tilde{\mathcal{S}}$ with global mode-dependent controllers (6).

Lemma 2 [3]*:* Suppose controllers (6) stabilise the uncertain large-scale system $\tilde{\mathcal{S}}$ subject to the IQCs (1), (2), (5). If the control gains $K_i(\cdot)$ in (3) are chosen, so that

$$\|\tilde{K}_i(\mu) - K_i(\mu_i)\|^2 \le \beta_i^{\mu}(\mu) \tag{7}$$

where $\mu \in \mathcal{M}$, $\mu_i = \Psi_i^{-1}(\mu) \in \mathcal{M}_i$, for all $i \in \mathcal{N}$, then the controllers in (3) stabilise the uncertain large-scale system $\mathcal{S}$ subject to the IQCs (1) and (2).

The next lemma provides a way to construct local mode-dependent controllers using the global ones.

Lemma 3 [3]*:* Given global mode-dependent controllers (6), the corresponding local mode-dependent controllers (3) can be constructed using the following transformation

$$K_i(\nu_i) = \frac{\sum_{\mu=1}^{M}\left\{\tilde{K}_i(\mu)q_{\infty\mu}\mathbb{I}_i(\mu,\nu_i)\right\}}{\sum_{\mu=1}^{M}\left\{q_{\infty\mu}\mathbb{I}_i(\mu,\nu_i)\right\}} \tag{8}$$

where $\nu_i \in \mathcal{M}_i$, $i \in \mathcal{N}$, $\mathbb{I}_i(\mu,\nu_i) = 1$ if $\nu_i = \Psi_i^{-1}(\mu)$, and $\mathbb{I}_i(\mu,\nu_i) = 0$, otherwise, $q_{\infty\mu}$ is the μ component of the vector q_∞. Then $K_i(\nu_i) = \lim_{t\to\infty} \mathrm{E}(\tilde{K}_i(\eta_t)|\eta_{i,t} = \nu_i)$.

The sufficient condition to design the local mode-dependent controllers (3) is given by the following theorem.

Theorem 1: Let $\gamma > 0$ be a prescribed level of H_∞-norm bound, suppose there exist matrices $X_i(\mu) \in \mathbb{S}^+$, $\bar{X}_i(\mu) \in \mathbb{S}^+$, scalars $\bar{\beta}_i(\mu) \in \mathbb{R}^+$, $\tilde{\beta}_i(\mu) \in \mathbb{R}^+$, $\bar{\tau}_i \in \mathbb{R}^+$, $\bar{\theta}_i \in \mathbb{R}^+$, $\bar{\phi}_i \in \mathbb{R}^+$, $i \in \mathcal{N}$, $\mu \in \mathcal{M}$, such that the matrix inequalities with rank constraints (9)–(13) are satisfied

$$\begin{bmatrix} \Upsilon_{i11}(\mu) & \Upsilon_{i12}(\mu) & \Upsilon_{i13}(\mu) \\ \star & \Upsilon_{i22}(\mu) & 0 \\ \star & \star & \Upsilon_{i33}(\mu) \end{bmatrix} < 0 \tag{9}$$

$$\bar{\phi}_i\tilde{R}_i(\mu) - I < 0 \tag{10}$$

$$\begin{bmatrix} \bar{\phi}_i I & \Delta_i(\mu) \\ \Delta_i^{\mathrm{T}}(\mu) & \tilde{\beta}_i(\mu)I \end{bmatrix} \ge 0 \tag{11}$$

$$\operatorname{rank}\left(\begin{bmatrix} \bar{X}_i(\mu) & I \\ I & X_i(\mu) \end{bmatrix}\right) \le n_i \tag{12}$$

$$\operatorname{rank}\left(\begin{bmatrix} \bar{\beta}_i(\mu) & 1 \\ 1 & \tilde{\beta}_i(\mu) \end{bmatrix}\right) \le 1 \tag{13}$$

where (see equations at the bottom of the page).

Then the global mode-dependent control gains $\tilde{K}_i(\mu)$ are given by

$$\tilde{K}_i(\mu) = -\tilde{R}_i(\mu)^{-1}\tilde{B}_i^{\mathrm{T}}(\mu)\bar{X}_i(\mu) \tag{14}$$

Moreover, the local mode-dependent controllers (3) can be constructed using (8), so that the uncertain system large-scale system $\mathcal{S}$ subject to the IQCs (1) (2) is MSS and satisfies the H_∞-performance (4).

Proof: The proof is divided into two steps. In step 1, we show that the global mode-dependent controllers defined in (6) with the form of (14) stabilise the auxiliary system $\tilde{\mathcal{S}}$

$$\begin{aligned}
\tilde{R}_i(\mu) &= \tilde{D}_i(\mu)^{\mathrm{T}}\tilde{D}_i(\mu) \\
\Upsilon_{i11}(\mu) &= X_i(\mu)\tilde{A}_i^{\mathrm{T}}(\mu) + \tilde{A}_i(\mu)X_i(\mu) + \bar{\theta}_i\tilde{E}_i(\mu)\tilde{E}_i^{\mathrm{T}}(\mu) + \bar{\tau}_i\tilde{F}_i(\mu)\tilde{F}_i^{\mathrm{T}}(\mu) + \gamma^{-2}\tilde{G}_i(\mu)\tilde{G}_i^{\mathrm{T}}(\mu) \\
&\quad - \tilde{B}_i(\mu)\tilde{R}_i^{-1}(\mu)\tilde{B}_i^{\mathrm{T}}(\mu) + q_{\mu\mu}X_i(\mu) \\
\Upsilon_{i12}(\mu) &= X_i(\mu)\begin{bmatrix} \tilde{C}_i^{\mathrm{T}}(\mu) & I & \overbrace{\tilde{H}_i^{\mathrm{T}}(\mu) \quad \dots \quad \tilde{H}_i^{\mathrm{T}}(\mu)}^{N} \end{bmatrix} \\
\Upsilon_{i22}(\mu) &= -\mathrm{diag}[I \quad \bar{\beta}_i I \quad \bar{\tau}_i I \quad \bar{\theta}_1 I \quad \dots \quad \bar{\theta}_{i-1}I \quad \bar{\theta}_{i+1}I \quad \dots \quad \bar{\theta}_N I] \\
\Upsilon_{i13}(\mu) &= X_i(\mu)\left[\sqrt{q_{\mu,1}}I \quad \dots \quad \sqrt{q_{\mu,\mu-1}}I \quad \sqrt{q_{\mu,\mu+1}}I \quad \dots \quad \sqrt{q_{\mu,M}}I\right] \\
\Upsilon_{i33}(\mu) &= -\mathrm{diag}[X_i(1) \quad \dots \quad X_i(\mu-1) \quad X_i(\mu+1) \quad \dots \quad X_i(M)] \\
\Delta_i(\mu) &= \frac{1}{\sum_{\nu=1}^{M}\{\mathbb{I}_i(\nu,\mu_i)q_{\infty\nu}\}}\sum_{\nu=1}^{M}\left\{\mathbb{I}_i(\nu,\mu_i)q_{\infty\nu}\left[\tilde{R}_i^{-1}(\nu)\tilde{B}_i^{\mathrm{T}}(\nu)\bar{X}_i(\nu) - \tilde{R}_i^{-1}(\mu)\tilde{B}_i^{\mathrm{T}}(\mu)\bar{X}_i(\mu)\right]\right\}
\end{aligned}$$

$$\begin{aligned}
&X_i(\mu)\tilde{A}_i^{\mathrm{T}}(\mu) + \tilde{A}_i(\mu)X_i(\mu) + \sum_{\nu=1}^{M} q_{\mu\nu}X_i(\mu)X_i(\nu)^{-1}X_i(\mu) + \bar{\theta}_i\tilde{E}_i(\mu)\tilde{E}_i^{\mathrm{T}}(\mu) \\
&\quad + X_i(\mu)\left[\tilde{C}_i^{\mathrm{T}}(\mu)\tilde{C}_i(\mu) + \bar{\beta}_i^{-1}(\mu)I + \left(\bar{\tau}_i^{-1} + \sum_{j=1,j\neq i}^{N}\bar{\theta}_j^{-1}\right)\tilde{H}_i^{\mathrm{T}}(\mu)\tilde{H}_i(\mu)\right]X_i(\mu) \\
&\quad + \bar{\tau}_i\tilde{F}_i(\mu)\tilde{F}_i^{\mathrm{T}}(\mu) + \gamma^{-2}\tilde{G}_i(\mu)\tilde{G}_i^{\mathrm{T}}(\mu) - \tilde{B}_i(\mu)\tilde{R}_i^{-1}(\mu)\tilde{B}_i^{\mathrm{T}}(\mu) < 0
\end{aligned} \tag{15}$$

© The Institution of Engineering and Technology 2013
IET Control Theory Appl., 2013, Vol. 7, Iss. 7, pp. 1029–1038
doi: 10.1049/iet-cta.2012.0713

subject to the IQCs (1), (2), (5) and satisfy H_∞ performance (4). In step 2, we show that the local mode-dependent controllers (3) constructed by (8) stabilise the system $\mathcal{S}$ subject to the IQCs (1) (2) and satisfy H_∞ performance (4).

Step 1: Using Schur complement equivalence, it follows from inequality (9)

$$\Upsilon_{i11} - \Upsilon_{i12}\Upsilon_{i22}^{-1}\Upsilon_{i12}^{\mathrm{T}} - \Upsilon_{i13}\Upsilon_{i33}^{-1}\Upsilon_{i13}^{\mathrm{T}} < 0$$

which can be further written as the inequality in (15). The rank constraints (12) and (13), together with $X_i(\mu) > 0$, $\bar{X}_i(\mu) > 0$ and $\bar{\beta}_i(\mu) > 0$, $\tilde{\beta}_i(\mu) > 0$, are equivalent to

$$\bar{X}_i(\mu) = (X_i(\mu))^{-1}, \quad \bar{\beta}_i(\mu) = (\tilde{\beta}_i(\mu))^{-1}$$

Let $\tau_i = \bar{\tau}_i^{-1}$, $\theta_i = \bar{\theta}_i^{-1}$, $\phi_i = \bar{\phi}_i^{-1}$, $\beta_i^u(\mu) = \bar{\phi}_i\tilde{\beta}_i(\mu)$ and $\hat{\theta}_i = \sum_{j=1,j\neq i}^{N}\theta_j$. Pre-multiplying and post-multiplying (15) by $\bar{X}_i(\mu)$, with $\tilde{K}_i(\mu)$ defined as the form of (14), we can obtain in inequality in (16).

In the derivation of (16), we have used the following equations

$$\begin{aligned}&\left[\tilde{B}_i(\mu)\tilde{K}_i(\mu)\right]^{\mathrm{T}}\bar{X}_i(\mu) + \bar{X}_i(\mu)\left[\tilde{B}_i(\mu)\tilde{K}_i(\mu)\right]\\ &\quad + \tilde{K}_i^{\mathrm{T}}(\mu)\tilde{R}_i(\mu)\tilde{K}_i(\mu)\\ &\quad = -\bar{X}_i(\mu)\tilde{B}_i(\mu)\tilde{R}_i^{-1}(\mu)\tilde{B}_i^{\mathrm{T}}(\mu)\bar{X}_i(\mu)\end{aligned}$$

and

$$\bar{X}_i(\mu)\tilde{B}_i(\mu) + \tilde{K}_i^{\mathrm{T}}(\mu)\tilde{R}_i(\mu) = 0$$

With the inequality (10) and according to Schur complement equivalence, the inequality (16) can be transformed to

$$\begin{bmatrix}\hat{\Upsilon}_{i11}(\mu) & \hat{\Upsilon}_{i12}(\mu) & \hat{\Upsilon}_{i13}(\mu)\\ \star & \hat{\Upsilon}_{i22}(\mu) & 0\\ \star & \star & -I\end{bmatrix} < 0 \tag{17}$$

where

$$\begin{aligned}\hat{\Upsilon}_{i11}(\mu) &= \left[\tilde{A}_i(\mu) + \tilde{B}_i(\mu)\tilde{K}_i(\mu)\right]^{\mathrm{T}}\bar{X}_i(\mu)\\ &\quad + \bar{X}_i(\mu)\left[\tilde{A}_i(\mu) + \tilde{B}_i(\mu)\tilde{K}_i(\mu)\right] + \sum_{\nu=1}^{M} q_{\mu\nu}\bar{X}_i(\nu)\\ &\quad + \tilde{C}_i^{\mathrm{T}}(\mu)\tilde{C}_i(\mu) + \phi_i\beta_i^u(\mu)I + \tilde{K}_i^{\mathrm{T}}(\mu)\tilde{R}_i(\mu)\tilde{K}_i(\mu)\\ &\quad + (\tau_i + \hat{\theta}_i)\tilde{H}_i^{\mathrm{T}}(\mu)\tilde{H}_i(\mu)\\ \hat{\Upsilon}_{i12}(\mu) &= \phi_i^{-1/2}\bar{X}_i(\mu)\tilde{B}_i + \phi_i^{-1/2}\tilde{K}_i^{\mathrm{T}}(\mu)\tilde{R}_i(\mu)\\ \hat{\Upsilon}_{i22}(\mu) &= -I + \phi_i^{-1}\tilde{R}_i(\mu)\\ \hat{\Upsilon}_{i13}(\mu) &= \bar{X}_i(\mu)\left[\theta_i^{-1/2}\tilde{E}_i(\mu) \quad \tau_i^{-1/2}\tilde{F}_i(\mu) \quad \gamma^{-1}\tilde{G}_i(\mu)\right]\end{aligned}$$

Using Schur complement equivalence again and Assumption 1, we obtain

$$\begin{bmatrix}\bar{\Upsilon}_{i11}(\mu) & \bar{\Upsilon}_{i12}(\mu) & \bar{\Upsilon}_{i13}(\mu)\\ \star & \bar{\Upsilon}_{i22}(\mu) & \bar{\Upsilon}_{i23}(\mu)\\ \star & \star & -I\end{bmatrix} < 0 \tag{18}$$

where (see equations at the bottom of the page).

Let us define

$$\bar{w}_i(t) \triangleq \left[\phi_i^{1/2}\tilde{\xi}_i^u(t)^{\mathrm{T}} \quad \theta_i^{1/2}\tilde{r}_i(t)^{\mathrm{T}} \quad \tau_i^{1/2}\tilde{\xi}_i(t)^{\mathrm{T}} \quad \gamma\tilde{w}_i(t)^{\mathrm{T}}\right]^{\mathrm{T}}$$

$$\bar{z}_i(t) \triangleq \left[\tilde{z}_i(t)^{\mathrm{T}} \quad (\tau_i + \hat{\theta}_i)^{1/2}\tilde{\zeta}_i(t)^{\mathrm{T}} \quad [\phi_i\beta_i^u(\eta_t)]^{1/2}\tilde{x}_i(t)^{\mathrm{T}}\right]^{\mathrm{T}}$$

and define $\bar{w} = [\bar{w}_1^{\mathrm{T}}, \ldots, \bar{w}_N^{\mathrm{T}}]^{\mathrm{T}}$ as the disturbance input, and $\bar{z} = [\bar{z}_1^{\mathrm{T}}, \ldots, \bar{z}_N^{\mathrm{T}}]^{\mathrm{T}}$ as the output, so the auxiliary system $\tilde{\mathcal{S}}$

$$\begin{aligned}&\left[\tilde{A}_i(\mu) + \tilde{B}_i(\mu)\tilde{K}_i(\mu)\right]^{\mathrm{T}}\bar{X}_i(\mu) + \bar{X}_i(\mu)\left[\tilde{A}_i(\mu) + \tilde{B}_i(\mu)\tilde{K}_i(\mu)\right] + \tilde{C}_i^{\mathrm{T}}(\mu)\tilde{C}_i(\mu) + \phi_i\beta_i^u(\mu)I\\ &\quad + \sum_{\nu=1}^{M} q_{\mu\nu}\bar{X}_i(\nu) + (\tau_i + \hat{\theta}_i)\tilde{H}_i^{\mathrm{T}}(\mu)\tilde{H}_i(\mu) + \bar{X}_i(\mu)\left[\theta_i^{-1}\tilde{E}_i(\mu)\tilde{E}_i^{\mathrm{T}}(\mu) + \tau_i^{-1}\tilde{F}_i(\mu)\tilde{F}_i^{\mathrm{T}}(\mu) + \gamma^{-2}\tilde{G}_i(\mu)\tilde{G}_i^{\mathrm{T}}(\mu)\right]\bar{X}_i(\mu)\\ &\quad + \tilde{K}_i^{\mathrm{T}}(\mu)\tilde{R}_i(\mu)\tilde{K}_i(\mu) - \left[\bar{X}_i(\mu)\tilde{B}_i(\mu) + \tilde{K}_i^{\mathrm{T}}(\mu)\tilde{R}_i(\mu)\right]\left[-\phi_i I + \tilde{R}_i(\mu)\right]^{-1}\left[\bar{X}_i(\mu)\tilde{B}_i(\mu) + \tilde{K}_i^{\mathrm{T}}(\mu)\tilde{R}_i(\mu)\right]^{\mathrm{T}} < 0\end{aligned} \tag{16}$$

$$\begin{aligned}\bar{\Upsilon}_{i11}(\mu) &= \left[\tilde{A}_i(\mu) + \tilde{B}_i(\mu)\tilde{K}_i(\mu)\right]^{\mathrm{T}}\bar{X}_i(\mu) + \bar{X}_i(\mu)\left[\tilde{A}_i(\mu) + \tilde{B}_i(\mu)\tilde{K}_i(\mu)\right] + \sum_{\nu=1}^{M} q_{\mu\nu}\bar{X}_i(\nu)\\ \bar{\Upsilon}_{i12}(\mu) &= \bar{X}_i(\mu)\left[\phi_i^{-1/2}\tilde{B}_i(\mu) \quad \theta_i^{-1/2}\tilde{E}_i(\mu) \quad \tau_i^{-1/2}\tilde{F}_i(\mu) \quad \gamma^{-1}\tilde{G}_i(\mu)\right]\\ \bar{\Upsilon}_{i22}(\mu) &= -I\\ \bar{\Upsilon}_{i13}(\mu) &= \begin{bmatrix}\tilde{C}_i(\mu) + \tilde{D}_i(\mu)\tilde{K}_i(\mu)\\ (\tau_i + \hat{\theta}_i)^{1/2}\tilde{H}_i(\mu)\\ [\phi_i\beta_i^u(\mu)]^{1/2}I\end{bmatrix}^{\mathrm{T}}\\ \bar{\Upsilon}_{i23}(\mu) &= \begin{bmatrix}\phi_i^{-1/2}\tilde{D}_i^{\mathrm{T}}(\mu) & 0 & 0\\ 0 & 0 & 0\\ 0 & 0 & 0\\ 0 & 0 & 0\end{bmatrix}\end{aligned}$$

© The Institution of Engineering and Technology 2013

with augmented outputs can be rewritten as the following system $\bar{\mathcal{S}}$

$$\bar{\mathcal{S}}: \begin{cases} \dot{\tilde{x}}(t) = A(\eta_t)\tilde{x}(t) + B(\eta_t)\tilde{u}(t) + B_2(\eta_t)\bar{w}(t) \\ \bar{z}(t) = C(\eta_t)\tilde{x}(t) + D(\eta_t)\tilde{u}(t) + D_2(\eta_t)\bar{w}(t) \end{cases}$$

where

$$\begin{aligned} A(\mu) &= \operatorname{diag}\left[\tilde{A}_1(\mu), \ldots, \tilde{A}_N(\mu)\right] \\ B(\mu) &= \operatorname{diag}\left[\tilde{B}_1(\mu), \ldots, \tilde{B}_N(\mu)\right] \\ B_2(\mu) &= \operatorname{diag}\left[\bar{B}_{2,1}(\mu), \ldots, \bar{B}_{2,N}(\mu)\right] \\ C(\mu) &= \operatorname{diag}\left[\bar{C}_1(\mu), \ldots, \bar{C}_N(\mu)\right] \\ D(\mu) &= \operatorname{diag}\left[\bar{D}_1(\mu), \ldots, \bar{D}_N(\mu)\right] \\ D_2(\mu) &= \operatorname{diag}\left[\bar{D}_{2,1}(\mu), \ldots, \bar{D}_{2,N}(\mu)\right] \\ \tilde{x} &= \left[\tilde{x}_1^{\mathrm{T}}, \ldots, \tilde{x}_N^{\mathrm{T}}\right]^{\mathrm{T}}, \quad \tilde{u} = \left[\tilde{u}_1^{\mathrm{T}}, \ldots, \tilde{u}_N^{\mathrm{T}}\right]^{\mathrm{T}} \end{aligned}$$

and the matrix coefficients are

$$\bar{B}_{2,i}(\mu) = \left[\phi_i^{-1/2}\tilde{B}_i(\mu) \;\; \theta_i^{-1/2}\tilde{E}_i(\mu) \;\; \tau_i^{-1/2}\tilde{F}_i(\mu) \;\; \gamma^{-1}\tilde{G}_i(\mu)\right]$$

$$\bar{C}_i(\mu) = \begin{bmatrix} \tilde{C}_i(\mu) \\ (\tau_i + \hat{\theta}_i)^{1/2}\tilde{H}_i(\mu) \\ [\phi_i\beta_i^u(\mu)]^{1/2}I \end{bmatrix}$$

$$\bar{D}_i(\mu) = \begin{bmatrix} \tilde{D}_i(\mu) \\ 0 \\ 0 \end{bmatrix}$$

$$\bar{D}_{2,i}(\mu) = \begin{bmatrix} \phi_i^{-1/2}\tilde{D}_i(\mu) & 0 & 0 & 0 \\ 0 & 0 & 0 & 0 \\ 0 & 0 & 0 & 0 \end{bmatrix}$$

Note that the auxiliary system $\tilde{\mathcal{S}}$ and the system $\bar{\mathcal{S}}$ have the same stability property.

Then the inequality (18) can be rewritten as

$$\begin{bmatrix} \bar{\Upsilon}_{i11}(\mu) & \bar{X}_i(\mu)\bar{B}_{2i}(\mu) & [\bar{C}_i(\mu) + \bar{D}_i(\mu)\tilde{K}_i(\mu)]^{\mathrm{T}} \\ \star & -I & \bar{D}_{2i}^{\mathrm{T}}(\mu) \\ \star & \star & -I \end{bmatrix} < 0,$$
$$i = 1, 2, \ldots, N$$

With the positive-definite matrices $\bar{X}(\mu)$ defined as $\operatorname{diag}[\bar{X}_1(\mu), \ldots, \bar{X}_N(\mu)]$ and the controller $\tilde{K}(\mu)$ defined as $\operatorname{diag}[\tilde{K}_1(\mu), \ldots, \tilde{K}_N(\mu)]$, we have

$$\begin{bmatrix} \bar{\Upsilon}_{11}(\mu) & \bar{X}(\mu)B_2(\mu) & [C(\mu) + D(\mu)\tilde{K}(\mu)]^{\mathrm{T}} \\ \star & -I & D_2^{\mathrm{T}}(\mu) \\ \star & \star & -I \end{bmatrix} < 0$$

where $\bar{\Upsilon}_{11}(\mu) = \operatorname{diag}[\bar{\Upsilon}_{111}(\mu), \ldots, \bar{\Upsilon}_{N11}(\mu)]$.

According to Lemma 1, the system $\bar{\mathcal{S}}$ is MSS and $\|\bar{\mathcal{S}}\|_\infty < 1$. This implies

$$\sup_{\substack{\bar{w}(\cdot)\in L_2[0,\infty) \\ \|\bar{w}(\cdot)\|\neq 0,\; x_0=0}} \frac{\left\{\mathrm{E}(\int_0^\infty \|\bar{z}(t)\|^2)\mathrm{d}t\right\}^{1/2}}{\left\{\int_0^\infty \|\bar{w}(t)\|^2\,\mathrm{d}t\right\}^{1/2}} = \sup_{\substack{\bar{w}(\cdot)\in L_2[0,\infty) \\ \|\bar{w}(\cdot)\|\neq 0,\; x_0=0}} \frac{\left\{\mathrm{E}\left[\int_0^\infty \left(\sum_{i=1}^N \|\bar{z}_i(t)\|^2\right)\mathrm{d}t\right]\right\}^{1/2}}{\left\{\int_0^\infty (\sum_{i=1}^N \|\bar{w}_i(t)\|^2)\mathrm{d}t\right\}^{1/2}} < 1$$

Note the definition of $\bar{z}_i$ and $\bar{w}_i$, we obtain (see equation at the bottom of the page)

According to (1), (2) and (5) we have

$$\mathrm{E}\left\{\int_0^\infty \sum_{i=1}^N \left[\|\tilde{z}_i(t)\|^2 - \gamma^2\|\tilde{w}_i(t)\|^2\right]\mathrm{d}t\right\} < \sum_{i=1}^N \left(\tau_i x_{i0}^{\mathrm{T}}\bar{S}_i x_{i0} + \theta_i x_{i0}^{\mathrm{T}}\tilde{S}_i x_{i0}\right) \tag{19}$$

When $x_0 = 0$, the right part of the inequality (19) is equal to zero, it means

$$\sup_{\substack{\tilde{w}(\cdot)\in L_2[0,\infty), \tilde{\xi}(\cdot)\in\Xi \\ \|\tilde{w}(\cdot)\|\neq 0, \tilde{r}(\cdot)\in\Pi, \tilde{\xi}^u(\cdot)\in\tilde{\Xi}^u}} \frac{\left\{\mathrm{E}\left[\int_0^\infty (\sum_{i=1}^N \|\tilde{z}_i(t)\|^2)\,\mathrm{d}t\right]\right\}^{1/2}}{\left\{\int_0^\infty (\sum_{i=1}^N \|\tilde{w}_i(t)\|^2)\,\mathrm{d}t\right\}^{1/2}} < \gamma$$

Hence, the controllers (6) with the gains given by (14) stabilise system $\tilde{\mathcal{S}}$ and satisfy H_∞-performance (4).

Step 2: In the LMI (11), it can be obtained that

$$\Delta_i(\mu) = \frac{\sum_{\nu=1}^M \left\{\mathbb{I}_i(\nu, \mu_i)q_{\infty\nu}[\tilde{K}_i(\mu) - \tilde{K}_i(\nu)]\right\}}{\sum_{\nu=1}^M \{\mathbb{I}_i(\nu, \mu_i)q_{\infty\nu}\}} = \tilde{K}_i(\mu) - K_i(\mu_i)$$

and

$$\|\Delta_i(\mu)\|^2 = \|\tilde{K}_i(\mu) - K_i(\mu_i)\|^2 \le \bar{\phi}_i\tilde{\beta}_i(\mu) = \beta_i^u(\mu)$$

$$\begin{aligned} &\mathrm{E}\left\{\int_0^\infty \sum_{i=1}^N \left[\|\tilde{z}_i(t)\|^2 + (\tau_i + \hat{\theta}_i)\|\tilde{\zeta}_i(t)\|^2 + \phi_i\beta_i^u(\eta_t)\|\tilde{x}_i(t)\|^2\right]\mathrm{d}t\right\} \\ &\quad - \mathrm{E}\left\{\int_0^\infty \sum_{i=1}^N \left[\gamma^2\|\tilde{w}_i(t)\|^2 + \tau_i\|\tilde{\xi}_i(t)\|^2 + \theta_i\|\tilde{r}_i(t)\|^2 + \phi_i\|\tilde{\xi}_i^u(t)\|^2\right]\mathrm{d}t\right\} \\ &\quad = \mathrm{E}\left\{\int_0^\infty \sum_{i=1}^N \left[(\|\tilde{z}_i(t)\|^2 - \gamma^2\|\tilde{w}_i(t)\|^2) + \tau_i(\|\tilde{\zeta}_i(t)\|^2 - \|\tilde{\xi}_i(t)\|^2)\right.\right. \\ &\quad \left.\left. + \theta_i\left(\sum_{j=1, j\neq i}^N \|\tilde{\zeta}_j(t)\|^2 - \|\tilde{r}_i(t)\|^2\right) + \phi_i\left(\beta_i^u(\eta_t)\|\tilde{x}_i(t)\|^2 - \|\tilde{\xi}_i^u(t)\|^2\right)\right]\mathrm{d}t\right\} < 0 \end{aligned}$$

© The Institution of Engineering and Technology 2013
IET Control Theory Appl., 2013, Vol. 7, Iss. 7, pp. 1029–1038
doi: 10.1049/iet-cta.2012.0713

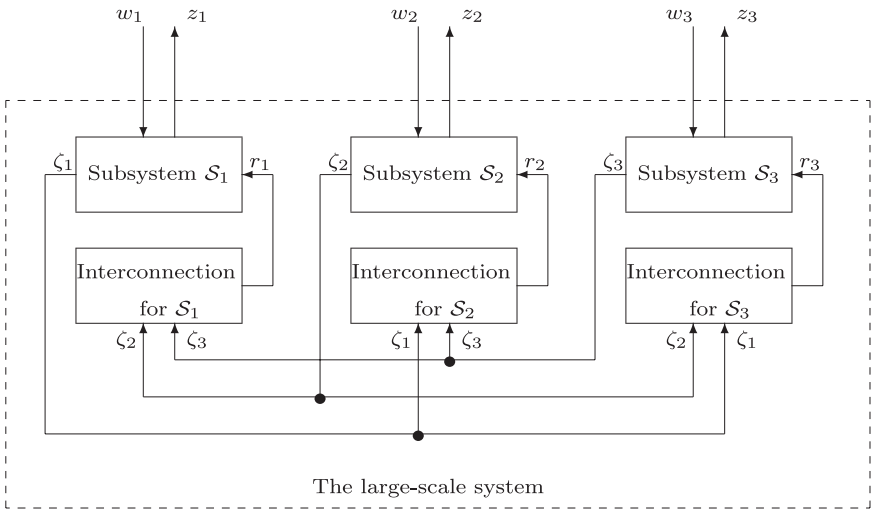

Fig. 2 *Structure of the system for example*

According to Lemma 3, the constructed controller (3) stabilises the uncertain system $\mathcal{S}$ subject to the IQCs (1) and (2).

As for the H_∞ performance of system $\mathcal{S}$, a particular uncertainty input of the form $\tilde{\xi}_i^u(t)$ is chosen to be

$$\tilde{\xi}_i^u(t) = -\Delta_i(\eta_t)\tilde{x}_i(t)$$

Then we obtain

$$\|\tilde{\xi}_i^u(t)\|^2 = \|\Delta_i(\eta_t)\tilde{x}_i(t)\|^2 \le \beta_i^u(\eta_t)\|\tilde{x}_i(t)\|^2$$

which means $\tilde{\xi}_i^u(t)$ is admissible uncertainty input for $\tilde{\mathcal{S}}$ according to Definition 5, and we have

$$\tilde{u}_i(t) + \tilde{\zeta}_i^u(t) = \left[\tilde{K}_i(\eta_t) - \Delta_i(\eta_t)\right]\tilde{x}_i(t) = K_i(\eta_{i,t})\tilde{x}_i(t)$$

If the same disturbances and sample path are applied to system $\mathcal{S}$ and system $\tilde{\mathcal{S}}$ we can obtain $\tilde{x}_i(t) = x_i(t)$.

The controlled output of the closed-loop auxiliary large-scale system $\tilde{\mathcal{S}}$ is

$$\tilde{z}_i(t) = [\tilde{C}_i(\eta_t) + \tilde{D}_i(\eta_t)K_i(\eta_{i,t})]\tilde{x}_i(t)$$

and the controlled output of the closed-loop system $\mathcal{S}$ is

$$z_i(t) = [C_i(\eta_{i,t}) + D_i(\eta_{i,t})K_i(\eta_{i,t})]x_i(t)$$

with $\tilde{C}_i(\eta_t) = C_i(\eta_{i,t})$, $\tilde{D}_i(\eta_t) = D_i(\eta_{i,t})$, so we obtain $\|\tilde{z}_i(t)\|^2 = \|z_i(t)\|^2$. Thus for the system $\mathcal{S}$, it is satisfied that

$$\sup_{\substack{w(\cdot)\in L_2[0,\infty),\xi(\cdot)\in\Xi \\ \|w(\cdot)\|\neq 0, r(\cdot)\in\Pi}} \frac{\left\{\mathrm{E}\left[\int_0^\infty (\sum_{i=1}^N \|z_i(t)\|^2)\,\mathrm{d}t\right]\right\}^{1/2}}{\left\{\int_0^\infty (\sum_{i=1}^N \|w_i(t)\|^2)\,\mathrm{d}t\right\}^{1/2}} < \gamma$$

It means the local mode-dependent controllers (3) stabilise the uncertain large-scale system $\mathcal{S}$ subject to the IQCs (1) and (2) with H_∞-performance (4). □

Remark 2: Owing to the existence of the rank constraints (12) and (13), the solution set to (9)–(13) is non-convex, bringing difficulties to find numerical solutions. Actually, LMIs with rank constraints have appeared widely in control area [3, 17, 21], and there have been a lot of efforts to deal with this kind of problems; see [22–24] and the references therein. We can use the rank constrained LMI solver LMIRank [25] to solve the conditions in Theorem 1.

Table 1 Relationship between local operation modes and global ones

(ν_1, ν_2, ν_3)	μ
(1, 1, 1)	1
(1, 2, 2)	2
(2, 1, 2)	3
(2, 2, 1)	4

5 Numerical example

We consider a large-scale system, which has three subsystems and each subsystem has two modes. The interconnection of this large-scale system can be seen in Fig. 2 (the structure of each subsystem can be seen in Fig. 1).

The initial condition of the system is assumed to be $x_{10} = [5, -5]^{\mathrm{T}}$, $x_{20} = [3, -3]^{\mathrm{T}}$, $x_{30} = [1, -1]^{\mathrm{T}}$, and $\eta_{10} = \eta_{20} = \eta_{30} = 1$. The state transition rate matrix of the global modes is given by

$$Q = \begin{bmatrix} -0.35 & 0.2 & 0.1 & 0.05 \\ 0.5 & -2.4 & 0.7 & 1.2 \\ 0.4 & 0.3 & -1.45 & 0.75 \\ 0.1 & 0.2 & 0.3 & -0.6 \end{bmatrix}$$

We assume there are constraints on the operation modes of the subsystems: the operation mode of subsystem $\mathcal{S}_1$ is assumed to depend on the operation modes of subsystems $\mathcal{S}_2$ and $\mathcal{S}_3$. Explicitly, $\eta_1(t) = 1$ if $\eta_2(t) = \eta_3(t)$, and $\eta_1(t) = 2$ otherwise. Therefore the operation mode pattern set $\mathcal{M}_p$ is given by $\{(1, 1, 1), (1, 2, 2), (2, 1, 2), (2, 2, 1)\}$; so $\mathcal{M} = \{1, 2, 3, 4\}$. The relationship between the local operation modes (ν_1, ν_2, ν_3) and the global operation modes μ can be described by Table 1.

The system data are chosen as follows

$$A_1(1) = \begin{bmatrix} 1 & 0 \\ 1 & 1.4 \end{bmatrix}, \quad A_1(2) = \begin{bmatrix} 1 & 0 \\ 1 & -2.4 \end{bmatrix}$$

© The Institution of Engineering and Technology 2013

$$A_2(1) = \begin{bmatrix} 1 & 0 \\ 1 & 1.2 \end{bmatrix}, \quad A_2(2) = \begin{bmatrix} 1 & 0 \\ 1 & -3.2 \end{bmatrix}$$

$$A_3(1) = \begin{bmatrix} 1 & 0 \\ 1 & 1.2 \end{bmatrix}, \quad A_3(2) = \begin{bmatrix} 1 & 0 \\ 1 & -1.2 \end{bmatrix}$$

$$B_1(1) = \begin{bmatrix} 1.9 \\ -1.4 \end{bmatrix}, \quad B_1(2) = \begin{bmatrix} 1.6 \\ -1.8 \end{bmatrix} \quad B_2(1) = \begin{bmatrix} 1.8 \\ 1.7 \end{bmatrix}$$

$$B_2(2) = \begin{bmatrix} 1.5 \\ -1.7 \end{bmatrix}, \quad B_3(1) = \begin{bmatrix} 1.5 \\ 1.7 \end{bmatrix}, \quad B_3(2) = \begin{bmatrix} 1.4 \\ 1.7 \end{bmatrix}$$

$$C_1(1) = \begin{bmatrix} 0.6 & 0.4 \\ 0 & 0 \end{bmatrix}, \quad C_1(2) = \begin{bmatrix} 0.6 & -0.4 \\ 0 & 0 \end{bmatrix}$$

$$C_2(1) = \begin{bmatrix} -0.7 & 0.5 \\ 0 & 0 \end{bmatrix}, \quad C_2(2) = \begin{bmatrix} 0.6 & 0.4 \\ 0 & 0 \end{bmatrix}$$

$$C_3(1) = \begin{bmatrix} -0.7 & 0.5 \\ 0 & 0 \end{bmatrix}, \quad C_3(2) = \begin{bmatrix} 0.6 & 0.4 \\ 0 & 0 \end{bmatrix}$$

$$D_1(1) = \begin{bmatrix} 0 \\ -0.3 \end{bmatrix}, \quad D_1(2) = \begin{bmatrix} 0 \\ 0.3 \end{bmatrix}, \quad D_2(1) = \begin{bmatrix} 0 \\ 0.6 \end{bmatrix}$$

$$D_2(2) = \begin{bmatrix} 0 \\ -0.6 \end{bmatrix}, \quad D_3(1) = \begin{bmatrix} 0 \\ 0.6 \end{bmatrix}, \quad D_3(2) = \begin{bmatrix} 0 \\ -0.6 \end{bmatrix}$$

$$E_1(1) = \begin{bmatrix} 0.1 \\ 0.1 \end{bmatrix}, \quad E_1(2) = \begin{bmatrix} 0.1 \\ -0.1 \end{bmatrix}, \quad E_2(1) = \begin{bmatrix} 0.2 \\ 0.1 \end{bmatrix}$$

$$E_2(2) = \begin{bmatrix} 0.1 \\ 0.2 \end{bmatrix}, \quad E_3(1) = \begin{bmatrix} 0.1 \\ 0.1 \end{bmatrix}, \quad E_3(2) = \begin{bmatrix} 0.1 \\ 0.2 \end{bmatrix}$$

$$F_1(1) = \begin{bmatrix} 0.5 \\ -0.1 \end{bmatrix}, \quad F_1(2) = \begin{bmatrix} 0.5 \\ -0.1 \end{bmatrix}, \quad F_2(1) = \begin{bmatrix} -0.3 \\ -0.2 \end{bmatrix}$$

$$F_2(2) = \begin{bmatrix} 0.2 \\ 0.2 \end{bmatrix}, \quad F_3(1) = \begin{bmatrix} -0.1 \\ -0.2 \end{bmatrix}, \quad F_3(2) = \begin{bmatrix} 0.1 \\ 0.2 \end{bmatrix}$$

$$G_1(1) = \begin{bmatrix} -0.3 \\ 0.3 \end{bmatrix}, \quad G_1(2) = \begin{bmatrix} 0.3 \\ -0.4 \end{bmatrix}, \quad G_2(1) = \begin{bmatrix} 0.3 \\ -0.4 \end{bmatrix}$$

$$G_2(2) = \begin{bmatrix} 0.4 \\ 0 \end{bmatrix}, \quad G_3(1) = \begin{bmatrix} -0.3 \\ -0.3 \end{bmatrix}, \quad G_3(2) = \begin{bmatrix} 0.4 \\ 0 \end{bmatrix}$$

$$H_1(1) = \begin{bmatrix} 0.8 & 0.3 \end{bmatrix}, \quad H_1(2) = \begin{bmatrix} 0.7 & 0.2 \end{bmatrix}$$

$$H_2(1) = \begin{bmatrix} 0.2 & 0.6 \end{bmatrix}, \quad H_2(2) = \begin{bmatrix} 0.8 & 0.2 \end{bmatrix}$$

$$H_3(1) = \begin{bmatrix} 0.1 & 0.5 \end{bmatrix}, \quad H_3(2) = \begin{bmatrix} 0.7 & 0.3 \end{bmatrix}$$

The local uncertainties and interconnections were chosen to be the following form

$$\begin{cases} \dot{x}_{\xi i}(t) = -10x_{\xi i}(t) + 10\zeta_i(t) \\ \xi_i(t) = x_{\xi i}(t) \end{cases}$$

$$\begin{cases} \dot{x}_{ri}(t) = \begin{bmatrix} -1 & 1 \\ -1 & -1 \end{bmatrix} x_{ri}(t) + 10 \begin{bmatrix} 1 \\ 1 \end{bmatrix} \sum_{j=1, j\neq i}^{3} \zeta_j(t) \\ r_i(t) = \begin{bmatrix} 0.7 & -0.7 \end{bmatrix} x_{ri}(t), \quad i = 1, 2, 3 \end{cases} \tag{20}$$

Both the uncertainties have the stable dynamic systems, and are admissible uncertainties according to Definitions 3 and 4. Given $\gamma = 1.36$, the gains of the global mode-dependent controllers of the form (6) are obtained by Theorem 1

$$K_1(1) = \begin{bmatrix} -34.3634 & -36.2178 \end{bmatrix}$$
$$K_1(2) = \begin{bmatrix} -35.4979 & -34.9940 \end{bmatrix}$$
$$K_1(3) = \begin{bmatrix} -20.6279 & -8.4957 \end{bmatrix}$$
$$K_1(4) = \begin{bmatrix} -17.5842 & -7.1341 \end{bmatrix}$$
$$K_2(1) = \begin{bmatrix} -3.3655 & 8.6813 \end{bmatrix}$$
$$K_2(2) = \begin{bmatrix} -4.9587 & 2.4603 \end{bmatrix}$$
$$K_2(3) = \begin{bmatrix} -3.4989 & 9.2715 \end{bmatrix}$$
$$K_2(4) = \begin{bmatrix} -5.19097 & 1.7874 \end{bmatrix}$$
$$K_3(1) = \begin{bmatrix} 1.9156 & -7.0101 \end{bmatrix}$$
$$K_3(2) = \begin{bmatrix} -8.7706 & 2.4661 \end{bmatrix}$$

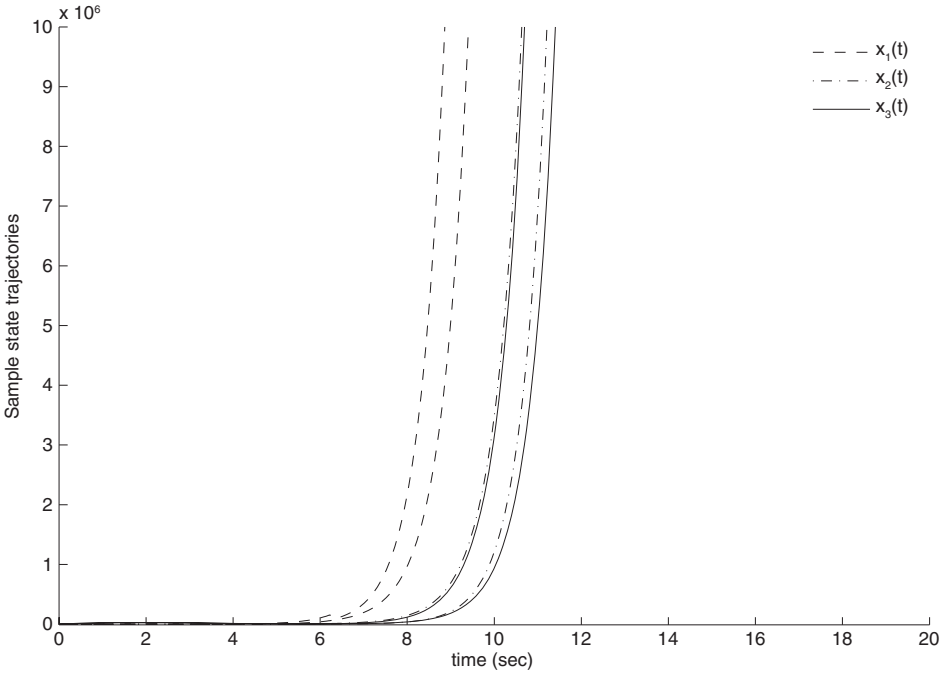

Fig. 3 *Initial response of the open-loop system without disturbance signals*

© The Institution of Engineering and Technology 2013
IET Control Theory Appl., 2013, Vol. 7, Iss. 7, pp. 1029–1038
doi: 10.1049/iet-cta.2012.0713

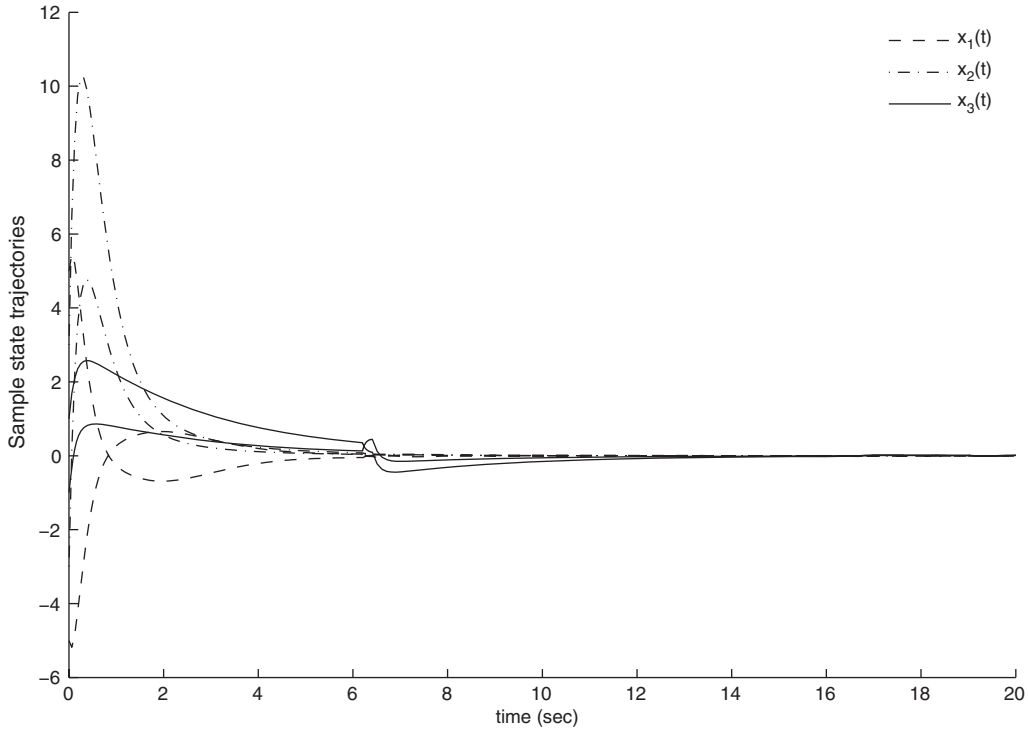

Fig. 4 *Initial response of the closed-loop system with disturbance signals*

$$K_3(3) = \begin{bmatrix} -8.3017 & 0.0576 \end{bmatrix}$$
$$K_3(4) = \begin{bmatrix} 1.4272 & -7.1653 \end{bmatrix}.$$

Using (8), the local mode-dependent controllers are obtained

$$K_1(1) = \begin{bmatrix} -34.7055 & -35.8488 \end{bmatrix}$$
$$K_1(2) = \begin{bmatrix} -18.5513 & -7.5668 \end{bmatrix}$$
$$K_2(1) = \begin{bmatrix} -3.4099 & 8.8778 \end{bmatrix}$$
$$K_2(2) = \begin{bmatrix} -5.1242 & 1.9806 \end{bmatrix}$$
$$K_3(1) = \begin{bmatrix} 1.6630 & -7.0904 \end{bmatrix}$$
$$K_3(2) = \begin{bmatrix} -8.5192 & 1.1747 \end{bmatrix}$$

Without controllers, the open-loop system is not stable, and the state trajectories are shown in Fig. 3.

Suppose the disturbance input signals are given by $w_i(t) = e^{-0.5t}$, $i = 1, 2, 3$, the initial state response of the closed-loop system is shown in Fig. 4. It shows the controllers can effectively stabilise the system.

6 Conclusions

This paper has studied the decentralised state feedback H_∞ control problem for a class of uncertain Markovian jump large-scale systems. The proposed controllers are constructed with local system states and local operation modes of the subsystems to guarantee the entire system stable with H_∞-performance. A sufficient condition in terms of rank constrained LMIs has been developed to construct such controllers. Finally, the developed theory has been illustrated by a numerical example.

7 Acknowledgment

This work was supported by National Natural Science Foundation of China under Grant 61004044, Programme for New Century Excellent Talents in University (11-0880) and the Fundamental Research Funds for the Central Universities (grant no. WK2100100013).

8 References

1 Sandell, N.R., Varaiya, P., Athans, M., Safonov, M.G.: 'Survey of decentralized control methods for large scale systems', *IEEE Trans. Autom. Control*, 1978, **23**, (2), pp. 108–128
2 Ugrinovskii, V.A., Pota, H.R.: 'Decentralized control of power systems via robust control of uncertain Markov jump parameter systems', *Int. J. Control*, 2005, **78**, (9), pp. 662–667
3 Xiong, J., Ugrinovskii, V.A., Petersen, I.R.: 'Local mode dependent decentralized stabilization of uncertain Markov jump large-scale systems', *IEEE Trans. Autom. Control*, 2009, **54**, (11), pp. 2632–2637
4 Ugrinovskii, V.A., Petersen, I.R., Savkin, A.V., Ugrinoskaya, E.Y.: 'Decentralized state-feedback stabilization and robust control of uncertain large-scale systems with integrally constrained interconnections', *Syst. Control Lett.*, 2000, **40**, pp. 107–119
5 de Farias, D.P., Geromel, J.C., do Val, J.B.R., Costa, O.L.V.: 'Output feedback control of Markov jump linear systems in continuous-time', *IEEE Trans. Autom. Control*, 2000, **45**, (5), pp. 944–949
6 Ma, S., Boukas, E.K.: 'Stability and robust stabilisation for uncertain discrete stochastic hybrid singular systems with time delay', *IET Control Theory Appl.*, 2009, **3**, (9), pp. 1217–1225
7 Feng, X., Loparo, K.A., Ji, Y., Chizeck, H.J.: 'Stochastic stability properties of jump linear systems', *IEEE Trans. Autom. Control*, 1992, **37**, (1), pp. 38–52
8 Xiong, J., Lam, J.: 'Robust H_2 control of Markovian jump systems with uncertain switching probabilities', *Int. J. Syst. Sci.*, 2009, **40**, (3), pp. 254–265
9 de Souza, C.E., Fragoso, M.D.: 'H_∞ control for linear systems with Markovian jumping parameters', *Control Theory Adv. Technol.*, 1993, **9**, (2), pp. 457–466
10 Li, L., Ugrinovskii, V.A.: 'On Necessary and sufficient conditions for H_∞ output feedback control of Markov jump linear systems', *IEEE Trans. Autom. Control*, 2007, **52**, (7), pp. 1287–1292
11 Zhang, L., Boukas, E.K.: 'H_∞ control of a class of extended Markov jump linear systems', *IET Control Theory Appl.*, 2009, **3**, (7), pp. 834–842

© The Institution of Engineering and Technology 2013

12 Wu, L., Yao, X., Zheng, W.: 'Generalized H_2 fault detection for Markovian jumping two-dimensional systems', *Automatica*, 2012, **48**, (8), pp. 1741–1750
13 Wu, L., Shi, P., Gao, H., Wang, C.: 'H_∞ Filtering for 2D Markovian jump systems', *Automatica*, 2008, **44**, (7), pp. 1849–1858
14 Wu, L., Su, X., Shi, P.: 'Sliding mode control with bounded L_2 gain performance of Markovian jump singular time-delay systems', *Automatica*, 2012, **48**, (8), pp. 1929–1933
15 Wu, L., Shi, P., Gao, H.: 'State estimation and sliding-mode control of Markovian jump singular systems', *IEEE Trans. Autom. Control*, 2010, **55**, (5), pp. 1213–1219
16 Zhang, L., Huang, B., Lam, J.: 'H_∞ model reduction of Markovian jump linear systems', *Syst. Control Lett.*, 2003, **50**, (2), pp. 103–118
17 Xiong, J., Ugrinovskii, V.A., Petersen, I.R.: 'Decentralized output feedback guaranteed cost control of uncertain Markovian jump large-scale systems: local mode dependent control approach', in Grigoriadis, K., Mohammadpour, M. (Eds.): 'Efficient modeling and control of large-scale systems' (Springer, 2010), pp. 167–196
18 Li, L., Ugrinovskii, V.A., Pota, H.R.: 'Decentralized robust control of uncertain Markov jump parameter systems via output feedback', *Automatica*, 2007, **43**, (11), pp. 1932–1944
19 Petersen, I.R.: 'Decentralized state feedback guaranteed cost control of uncertain systems with uncertainty described by integral quadratic constraints'. Proc. American Control Conf., Minneapolis, Minnesota, USA, 2006, pp. 1333–1339
20 Todorov, M.G., Fragoso, M.D.: 'Infinite Markov jump bounded real lemma', *Syst. Control Lett.*, 2008, **57** (1), pp. 64–70
21 Li, L., Petersen, I.R.: 'A rank constrained LMI algorithm for decentralized state feedback guaranteed cost control of uncertain systems with uncertainty described by integral quadratic constraints'. Proc. American Control Conf., New York City, USA, 2007, pp. 796–801
22 Iwasaki, T., Skelton, R.E.: 'The XY-centering algorithm for the dual LMI problem: a new approach to fixed order control design', *Int. J. Control*, 1995, **62**, (6), pp. 1257–1272
23 Ghaoui, L.E, Oustry, F., Rami, M.A.: 'Acone complementarity linearization algorithm for static output-feedback and related problems', *IEEE Trans. Autom. Control*, 1997, **42**, (8), pp. 1171–1176
24 Orsi, R., Helmke, U., Moore, J.B.: 'A newton-like method for solving rank constrained linear matrix inequalities', *Automatica*, 2006, **43**, (11), pp. 1875–1882
25 Orsi, R.: 'LMIRank: software for rank constrained LMI problems, 2005', available from http://rsise.anu.edu.au/robert/lmirank/

© The Institution of Engineering and Technology 2013
IET Control Theory Appl., 2013, Vol. 7, Iss. 7, pp. 1029–1038
doi: 10.1049/iet-cta.2012.0713