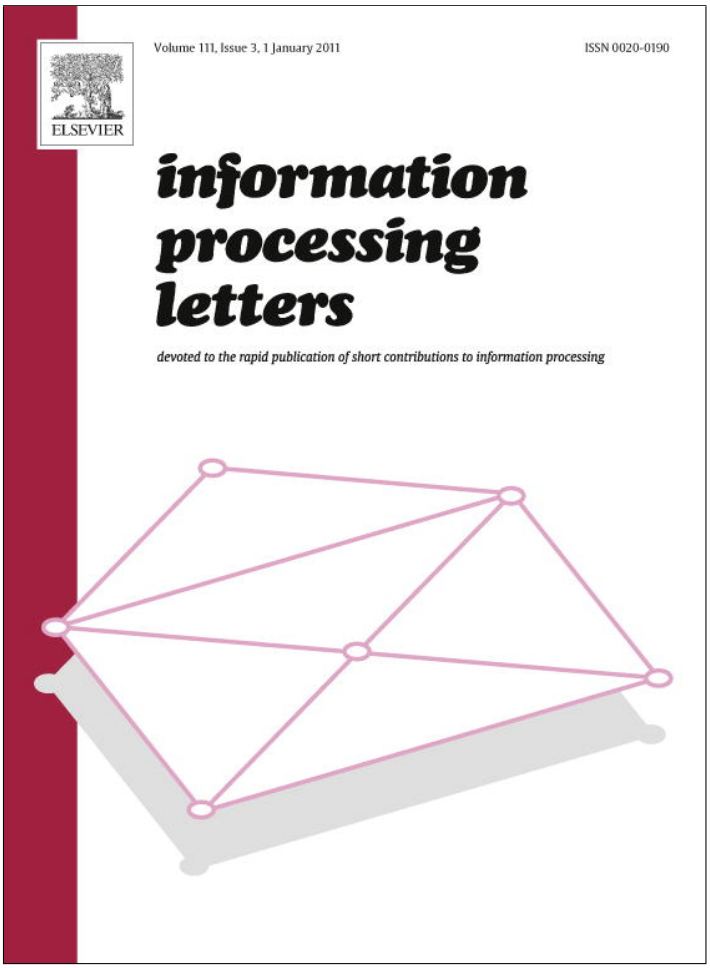

(This is a sample cover image for this issue. The actual cover is not yet available at this time.)

Information Processing Letters 111 (2011) 557–560

Contents lists available at ScienceDirect

Information Processing Letters

www.elsevier.com/locate/ipl

A note on cycle embedding in hypercubes with faulty vertices ☆

Zheng-Zhong Du, Jun-Ming Xu *

Department of Mathematics, University of Science and Technology of China, Hefei, Anhui, 230026, China

ARTICLE INFO

Article history:
Received 23 September 2010
Received in revised form 28 February 2011
Accepted 3 March 2011
Available online 17 March 2011
Communicated by A.A. Bertossi

Keywords:
Combinatorics
Cycle
Graph
Hypercube
Fault tolerance

ABSTRACT

Let f_v denote the number of faulty vertices in an n-dimensional hypercube. This note shows that a fault-free cycle of length of at least $2^n - 2f_v$ can be embedded in an n-dimensional hypercube with $f_v = 2n - 3$ and $n \geqslant 5$. This result not only enhances the previously best known result, and also answers a question in [J.-S. Fu, Fault-tolerant cycle embedding in the hypercube, Parallel Computing 29 (2003) 821–832].

1. Introduction

To find a cycle of given length in a graph is a cycle embedding problem. In this paper we consider the problem of embedding a cycle in a hypercube network with faulty vertices. This problem has received many researchers' attention in the recent years, see for example, [1–27]. Let f_v and f_e be the number of faulty vertices and edges, respectively. Fu [9] showed that a fault-free cycle of length at least $2^n - 2f_v$ can be embedded in Q_n if $n \geqslant 3$ and $f_v \leqslant 2n - 4$. Hsieh [11] improved by proving that a fault-free cycle of length at least $2^n - 2f_v$ can be embedded in Q_n if $n \geqslant 3$, $f_e + f_v \leqslant 2n - 4$ and $f_e \leqslant n - 2$.

In [9], Fu gave an example to show that a fault-free cycle of length at least $2^4 - 2 \times 5 = 6$ cannot be embedded in Q_4 with five faulty vertices. At the same time, he pointed: it is not easy to prove that a fault-free cycle of length of at least $2^n - 2f_v$ cannot be embedded in Q_n with f_v faulty vertices if $n \geqslant 5$ and $f_v \geqslant 2n - 3$. In this note, we answer this question by proving the following theorem.

Theorem. *In Q_n, if $n \geqslant 5$ and $f_v = 2n - 3$, then there is a fault-free even cycle of length at least $2^n - 2f_v$.*

2. Proof of theorem

For graph-theoretical terminology and notation not defined here, we follow [28]. Let $G = (V, E)$ be a connected simple graph, where $V = V(G)$ is the vertex-set and $E = E(G)$ is the edge-set of G. A uv-path is a sequence of adjacent vertices, written as $\langle v_0, v_1, v_2, \ldots, v_m \rangle$, in which $u = v_0$, $v = v_m$ and all the vertices $v_0, v_1, v_2, \ldots, v_m$ are different from each other. The length of a path P is the number of edges in P. Let $d_G(u, v)$ be the length of a shortest uv-path in graph G. For a path $P = \langle v_0, v_1, \ldots, v_i, v_{i+1}, \ldots, v_m \rangle$, we can express P as $P = P(v_0, v_i) + v_i v_{i+1} + P(v_{i+1}, v_m)$.

An n-dimensional hypercube Q_n is a graph with 2^n vertices, in which each vertex is denoted by an n-bit binary string $u = u_n u_{n-1} \cdots u_2 u_1$. Two vertices are adjacent if and only if their strings differ in exactly one bit position. It has been proved that Q_n is a vertex and edge transitive bipartite graph.

By the definition, for any $k \in \{1, 2, \ldots, n\}$, Q_n can be expressed as $Q_n = L_k \odot R_k$, where L_k and R_k are two subgraphs of Q_n induced by the vertices with the k bit position is 0 and 1, respectively, which are isomorphic to Q_{n-1}.

☆ The work was supported by NNSF of China (No. 11071233).

* Corresponding author.
E-mail address: xujm@ustc.edu.cn (J.-M. Xu).

0020-0190/$ – see front matter
doi:10.1016/j.ipl.2011.03.002

We call edges between L_k and R_k to be k-dimensional, which form a perfect matching of Q_n. Clearly, for any edge e of Q_n, there is some $k \in \{1, 2, \ldots, n\}$ such that e is k-dimensional. Use u_L and u_R to denote two vertices in L_k and R_k, respectively, linked by the k-dimensional edge $u_L u_R$ in Q_n.

Let F_v denote a set of faulty vertices in Q_n, and $f_v = |F_v|$. For any $k \in \{1, 2, \ldots, n\}$, we always express Q_n as $Q_n = L_k \odot R_k$, and $F_L = F_v \cap L_k$ and $F_R = F_v \cap R_k$. Let $f_L = |F_L|$ and $f_R = |F_R|$.

Lemma 2.1. *(See Fu [9].) In Q_n, if $n \geqslant 3$ and $f_v \leqslant 2n - 4$, then Q_n contains a fault-free even cycle of length at least $2^n - 2f_v$.*

Lemma 2.2. *(See Hsieh [11].) In Q_n, if $n \geqslant 3$ and $f_v \leqslant n - 2$, then for any two fault-free vertices x and y with odd distance, then there is a fault-free xy-path of length at least $2^n - 2f_v - 1$.*

Lemma 2.3. *In Q_3, if $f_v \leqslant 2$, then for any fault-free edge xy there is a fault-free even cycle of length at least $8 - 2f_v$ containing xy provided that both x and y have at least two fault-free neighbors.*

Proof. It is not difficult to check the result holds. □

Lemma 2.4. *In Q_4, if $f_v = 3$, then for any fault-free edge xy there is a fault-free even cycle of length at least 10 containing xy provided that both x and y have at least two fault-free neighbors.*

Proof. Let xy be a fault-free edge in Q_4. Then there exists a $k \in \{1, 2, 3, 4\}$ such that $Q_4 = L_k \odot R_k$, $x \in L$ and $y \in R$. Without loss of generality, we can assume $f_L \geqslant f_R$. Consider two cases.

Case 1. $f_L = 3$.

In this case, $f_R = 0$. Since both x and y have at least two fault-free neighbors in Q_4, there is a fault-free neighbor u_L of x in L such that u_R is fault-free in R. Then $yu_R \in E(R)$. By Lemma 2.3, in R there is a fault-free yu_R-path P_{yu_R} of length 7. Thus, $xy + P_{yu_R} + u_R u_L + u_L x$ is a fault-free cycle of length 10 in Q_4.

Case 2. $f_L = 2$.

In this case $f_R = 1$. If x has at least two fault-free neighbors in L, then we can find a fault-free neighbor u_L such that u_R in R is fault-free, and u_L has at least two fault-free neighbors in L. By Lemma 2.3, in L there is a fault-free xu_L-path $P_{u_L x}$ of length 3, and in R there is a fault-free yu_R-path P_{yu_R} of length 5. Thus, $xy + P_{yu_R} + u_R u_L + P_{u_L x}$ is a fault-free cycle of length 10 in Q_4.

If x has exact one fault-free neighbor in L (see Fig. 1). Then three vertices (that is, x_1, x_2, x_3 in Fig. 1) with distance two to x in L are fault-free, at least one, say u_L, of them has a fault-free neighbor u_R in R. There is a fault-free xu_L-path of length 4 in L, denoted by P_{xu_L}. Similarly, there is a fault-free $u_R y$-path of length 4 in R, denoted by $P_{u_R y}$. Thus $P_{xu_L} + u_L u_R + P_{u_R y} + yx$ is a fault-free cycle of length 10 in Q_4. □

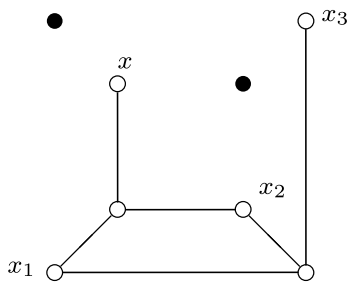

Fig. 1. Two black vertices are faulty neighbors of x in Q_3.

Lemma 2.5. *In Q_n, if $f_v \geqslant n + 2$, then there exists a $k \in \{1, 2, \ldots, n\}$ such that, in $Q_n = L_k \odot R_k$, both L_k and R_k contain at least two faulty vertices.*

Proof. We only need to prove that the assertion holds for $f_v = n + 2$. Suppose to the contrary that $f_L \leqslant 1$ or $f_R \leqslant 1$ for any $k \in \{1, 2, \ldots, n\}$. Then there are at least $(n + 1)$ faulty vertices whose k-th bit positions are identical for every $k \in \{1, 2, \ldots, n\}$.

Denote by F_v^n the set of faulty vertices whose n-th bit positions are identical, and denote by F_v^{n-k} the set of vertices in F_v^{n-k+1} whose $(n - k)$-bit positions are identical for each $k = 1, 2, \ldots, n - 1$. Then $|F_v^n| \geqslant n + 1$ and $|F_v^{n-k}| \geqslant n + 1 - k$ for each $k = 1, 2, \ldots, n - 1$. Thus, we have $|F_v^1| \geqslant 2$, which is impossible since all bit positions of any vertex in F_v^1 are identical. □

Lemma 2.6. *In Q_5, if $f_v = 7$, then there is a fault-free even cycle of length at least 18.*

Proof. Since $f_v = 7$, by Lemma 2.5, there exists a $k \in \{1, 2, 3, 4, 5\}$ such that, in $Q_n = L_k \odot R_k$, $f_L \geqslant 2$ and $f_R \geqslant 2$.

Without loss of generality, assume $f_L \geqslant f_R$. To construct a fault-free even cycle of length at least 18 in Q_5, we consider two cases.

Case 3. $f_L = 4$.

In this case, $f_R = 3$. By Lemma 2.1, in L_k, there is a fault-free even cycle C_L of at least 8. Since $f_R = 3$, there are two adjacent edges, say uv and vs in C_L such that $\{u_R, v_R, s_R\} \cap F_R = \emptyset$. Clearly, v_R has two fault-free neighbors u_R and s_R, and at least one of u_R and s_R has two fault-free neighbors in R_k, say u_R. By Lemma 2.4, there is a fault-free $u_R v_R$-path $P_{u_R v_R}$ of length at least 9 in R_k. Thus, $C_L - uv + uu_R + vv_R + P_{u_R v_R}$ is a fault-free even cycle of length at least 18 in Q_5.

Case 4. $f_L = 5$.

In this case, $f_R = 2$. For any vertex $x \in F_L$, let $F_x = F_L - \{x\}$. By Lemma 2.1, there is a cycle C_x of length at least 8 in $L_k - F_x$.

If there exists some $x \in F_L$ such that x is not in C_x, then choose an edge $uv \in C_x$ such that both u_R and v_R are not

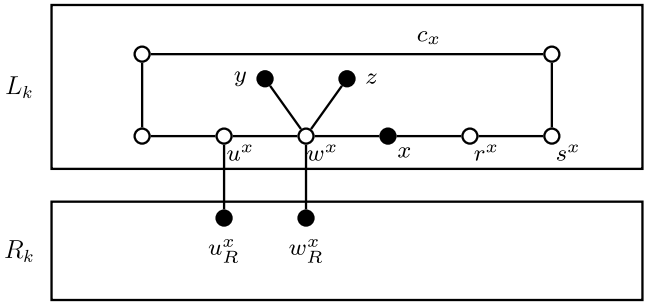

Fig. 2. Five black vertices are faulty vertices in Q_5.

in F_R. By Lemma 2.2, in R_k, there is a fault-free $u_R v_R$-path $P_{u_R v_R}$ of length at least 11. Then $C_x - uv + uu_R + vv_R + P_{u_R v_R}$ is a fault-free even cycle of length at least 20 in Q_5.

Now assume that x is in C_x for any $x \in F_L$. Let P_x be a $u^x v^x$-section of length three in C_x containing x as an internal vertex. If both u_R^x and v_R^x are fault-free then, by Lemma 2.2, in R_k there exists a fault-free $u_R^x v_R^x$-path $P_{u_R^x v_R^x}$ of length at least 11. Thus, $C_x - P_x + u^x u_R^x + v^x v_R^x + P_{u_R^x v_R^x}$ is a fault-free even cycle of length at least 18 in Q_5.

We now show that there must be such an $x \in F_L$ and a path P_x that satisfy the above requirements. Note that P_x has the form $\langle u^x, w^x, x, v^x \rangle$ or $\langle w^x, x, v^x, s^x \rangle$ for any $x \in F_L$. If there is no such a path P_x, then there exists at least one of either $\{u^x, v^x\}$, or $\{w^x, s^x\}$ whose neighbor in R_k is a faulty vertex for any $x \in F_L$. Without loss of generality, assume that u^x and w^x are such two vertices. Then there are at most two, say y and z, in F_L different from x such that both C_y and C_z contain the edge $u^x w^x$ and both y and z are adjacent to w^x (see Fig. 2). Since w^x has neighbors u^x, x, y, z in L_k, for any $p \in F_L - \{x, y, z\}$, C_p does not contain the edge $u^x w^x$, and so there exists a path P_p that satisfy our requirements.

The lemma follows. □

Proof of Theorem. We proceeds by induction on $n \geqslant 5$. For $n = 5$, the assertion holds by Lemma 2.6. Assume the induction hypothesis for $n - 1$ with $n \geqslant 6$.

By Lemma 2.5, there exists a $k \in \{1, 2, 3, 4, 5\}$ such that, in $Q_n = L_k \odot R_k$, $f_L \geqslant 2$ and $f_R \geqslant 2$.

Without loss of generality, we can assume $f_L \geqslant f_R$. Then $f_L \leqslant 2n - 5$ and $f_R \leqslant n - 2$. By the induction hypothesis, there is fault-free even cycle C_L of length at least $2^{n-1} - 2|F_L|$. Since $f_R + f_L = 2n - 3$ and $n \geqslant 6$,

$$2^{n-1} - 2f_L \geqslant 2f_R + 3,$$

which implies that there are two non-adjacent edges uv and rs in C_L such that $\{u_R, v_R, r_R, s_R\} \cap F_R = \emptyset$. In $\{u_R v_R, r_R s_R\}$, there exists at least on edge, say $u_R v_R$, such that both u_R and v_R have at least two fault-free neighbors in R_k. By Lemma 2.2, R_k contains a fault-free $u_R v_R$-path $P_{u_R v_R}$ of length at least $2^{n-1} - 2f_R - 1$. Thus, $C_L - uv + uu_R + vv_R + P_{u_R v_R}$ is a fault-free even cycle of length at least $2^n - 2f_v$.

The theorem follows. □

Acknowledgements

The authors would like to express their gratitude to the anonymous referees for their kind suggestions and useful comments on the original manuscript, which resulted in this final version.

References

[1] S.G. Akl, Parallel Computation: Models and Methods, Prentice Hall, 1997.
[2] M.Y. Chan, S.J. Lee, On the existence of Hamiltonian circuits in faulty hypercubes, SIAM Journal on Discrete Mathematics 4 (1991) 511–527.
[3] X.-B. Chen, Cycles passing through prescribed edges in a hypercube with some faulty edges, Information Processing Letters 104 (6) (2007) 211–215.
[4] X.-B. Chen, Many-to-many disjoint paths in faulty hypercubes, Information Sciences 179 (18) (2009) 3110–3115.
[5] X.-B. Chen, On path bipancyclicity of hypercubes, Information Processing Letters 109 (12) (2009) 594–598.
[6] X.-B. Chen, Hamiltonian paths and cycles passing through a prescribed path in hypercubes, Information Processing Letters 110 (2) (2009) 77–82.
[7] X.-B. Chen, Cycles passing through a prescribed path in a hypercube with faulty edges, Information Processing Letters 110 (16) (2010) 625–629.
[8] X.-B. Chen, Edge-fault-tolerant diameter and bipanconnectivity of hypercubes, Information Processing Letters 110 (24) (2010) 1088–1092.
[9] J.S. Fu, Fault-tolerant cycle embedding in the hypercube, Parallel Computing 29 (2003) 821–832.
[10] F. Harary, J.P. Hayes, Edge fault tolerance in graphs, Networks 23 (1993) 135–142.
[11] S.-Y. Hsieh, Fault-tolerant cycle embedding in the hypercube with more both faulty vertices and faulty edges, Parallel Computing 32 (1) (2006) 84–91.
[12] S.-Y. Hsieh, N.-W. Chang, Hamiltonian path embedding and pancyclicity on the Mobius cube with faulty nodes and faulty edges, IEEE Transactions on Computers 55 (7) (2006) 854–863.
[13] S.-Y. Hsieh, G.-H. Chen, C.-W. Ho, Hamiltonianlaceability of star graphs, Networks 36 (4) (2000) 225–232.
[14] S.-Y. Hsieh, C.-W. Ho, G.-H. Chen, Fault-free Hamiltonian cycles in faulty arrangement graphs, IEEE Transactions on Parallel and Distributed Systems 10 (3) (1999) 223–237.
[15] S.-Y. Hsieh, C.-W. Lee, Conditional edge-fault hamiltonicity of matching composition networks, IEEE Transactions on Parallel and Distributed Systems 20 (4) (2009) 581–592.
[16] S.-Y. Hsieh, C.-W. Lee, Pancyclicity of restricted hypercube-like networks under the conditional fault model, SIAM Journal on Discrete Mathematics 23 (4) (2010) 2010–2019.
[17] S. Latifi, S. Zheng, N. Bagherzadeh, Optimal ring embedding in hypercubes with faulty links, in: Twenty-Second International Symposium on Fault-Tolerant Computing, FTCS-22, Digest of papers, 1992, pp. 178–184.
[18] F.T. Leighton, Introduction to Parallel Algorithms and Architecture: Arrays, Trees, Hypercubes, Morgan Kaufmann, San Mateo, 1992.
[19] T.K. Li, C.H. Tsai, J.J.M. Tan, L.H. Hsu, Bipanconnected and edge-fault-tolerant bipancyclic of hypercubes, Information Processing Letters 87 (2003) 107–110.
[20] A. Sengupta, On ring in hypercubes with faulty nodes and links, Information Processing Letters 68 (1998) 207–214.
[21] C.H. Tsai, Linear array and ring embeddings in conditional faulty hypercubes, Theoretical Computer Science 314 (3) (2004) 431–443.
[22] C.H. Tsai, J.J.M. Tan, T. Liang, L.H. Hsu, Fault tolerant Hamiltonian laceability of hypercubes, Information Processing Letters 83 (2002) 301–306.
[23] Y.C. Tseng, Embedding a ring in a hypercube with both faulty links and faulty nodes, Information Processing Letters 59 (1996) 217–222.
[24] H.-L. Wang, J.-W. Wang, J.-M. Xu, Edge-fault-tolerant bipanconnectivity of hypercubes, Information Sciences 179 (4) (2009) 404–409.
[25] J.-M. Xu, Z.-Z. Du, M. Xu, Edge-fault-tolerant edge-bipancyclicity of

hypercubes, Information Processing Letters 96 (4) (2005) 146–150.
[26] J.-M. Xu, M.-J. Ma, A survey on cycle and path embedding in some networks, Frontiers of Mathematics in China 4 (2) (2009) 217–252.
[27] J.-M. Xu, Topological Structure and Analysis of Interconnection Networks, Kluwer Academic Publishers, Dordrecht/Boston/London, 2001.
[28] J.-M. Xu, Theory and Application of Graphs, Kluwer Academic Publishers, Dordrecht/Boston/London, 2003.